513.0
30.1
233.2

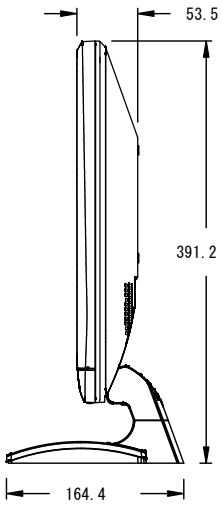
53.5
391.2
164.4

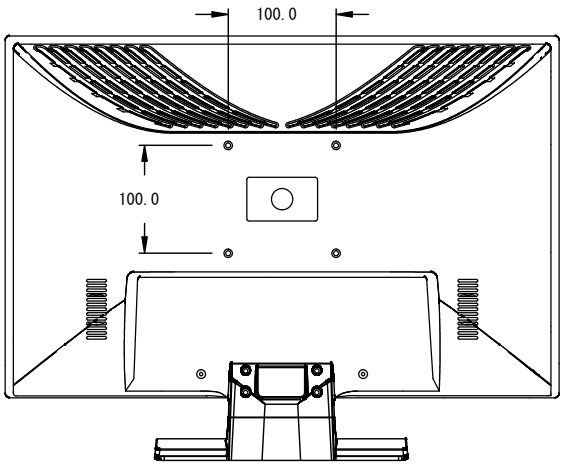
100.0
100.0