PRODUCTION RELEASE & REVISION				
REV	DESCRIPTION	BY	CHK	DATE

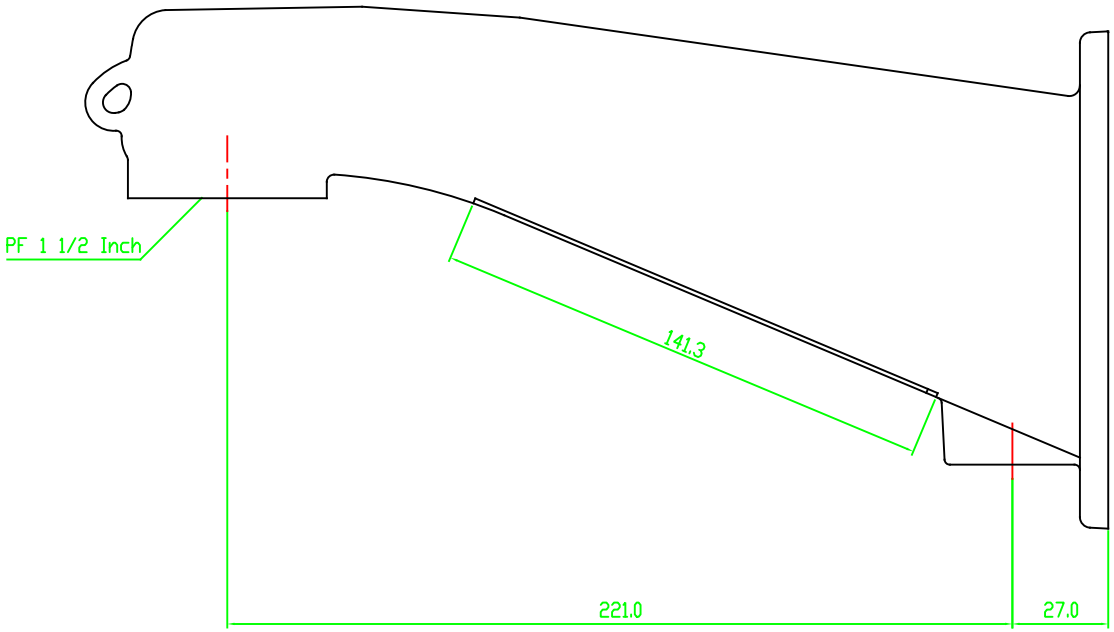

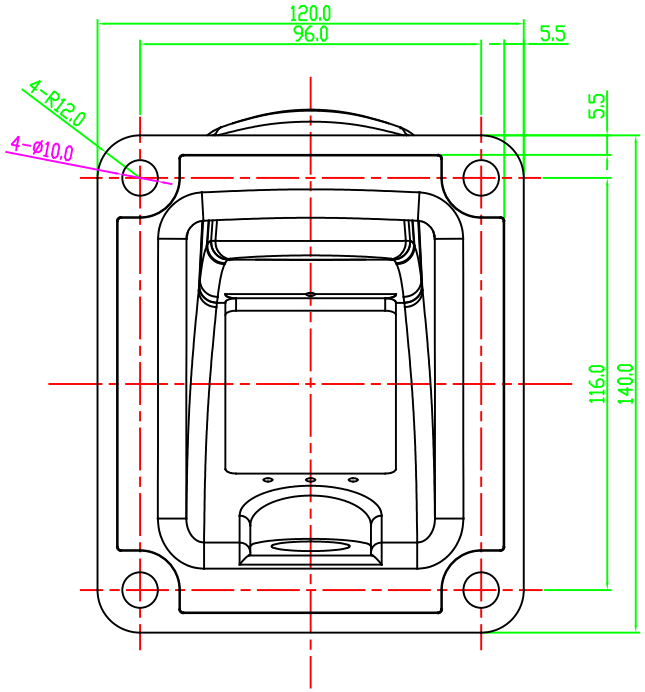

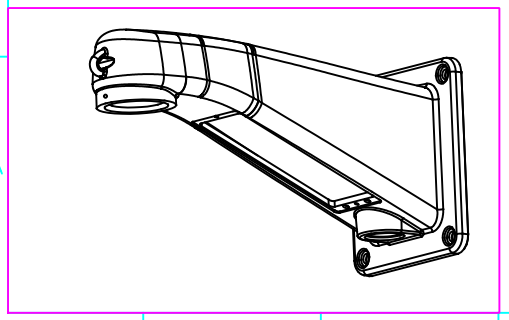

Model Name	ERP Code	Finish(Resin ND)	Remark

APPROVALS	DATE
DRN.	
CHKD.	
MFG.	

TITLE : PF-EA032

SCALE AS | DWG. NO. | REV. A