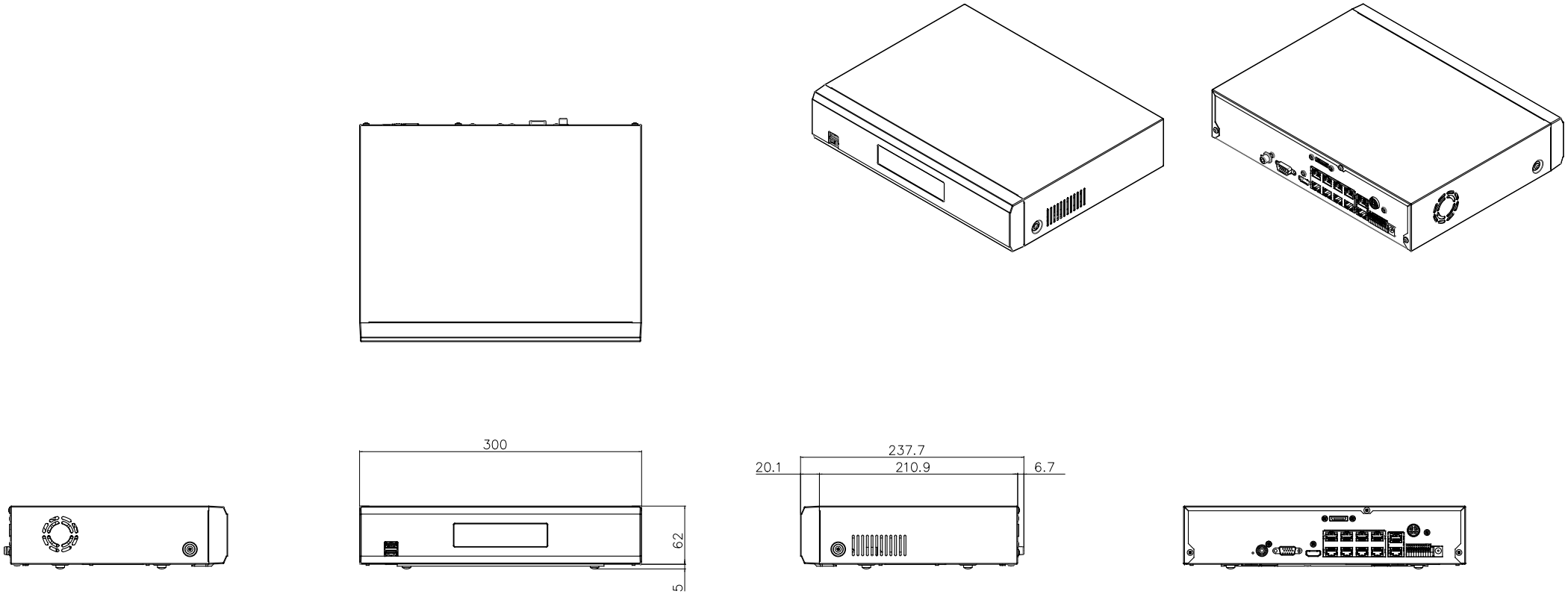

Drawing Number					
Date	2015.11.12				
Material					
Finish & Color					
Gross Vol Volume					
Checked by					
Approved by					
Checked by					
Date					
Scale of Drawing					