| Rev. | Description | Signature | Checked | Date |
|---|---|---|---|---|
| | | | | |

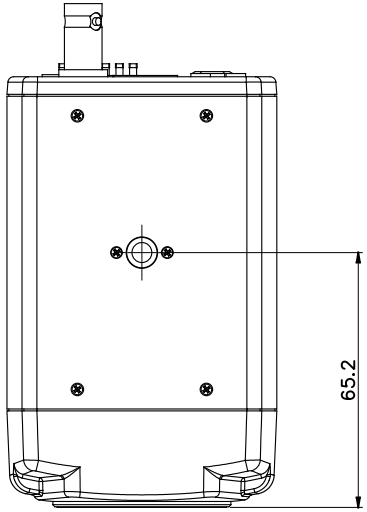


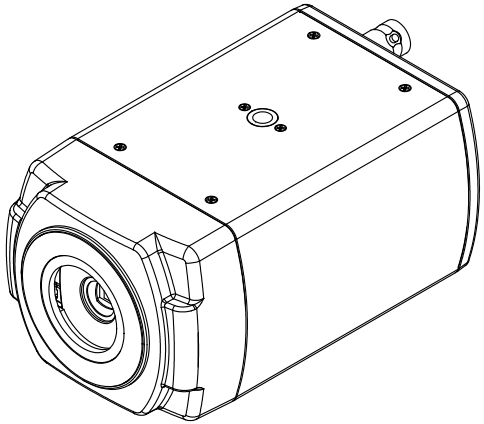

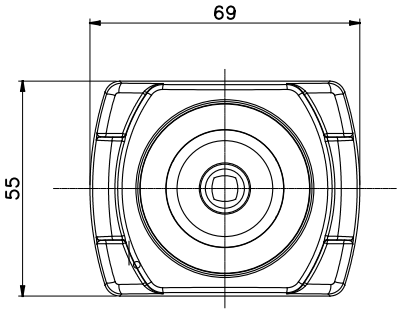


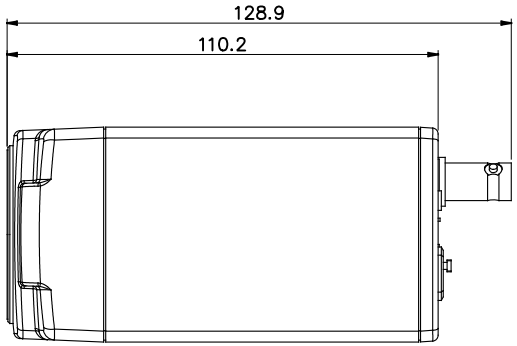


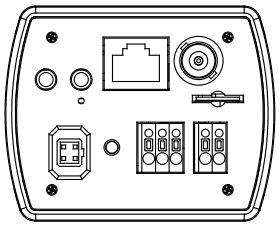

| No. | Name | Q'TY | Material & Spec. | Reference |
|---|---|---|---|---|
| | フルHD対応2メガピクセルボックス型ネットワークカメラ | | | |

| | | | |
|---|---|---|---|
| General Tolerance (Length / Angle) | Date 2018.05.31 | | Model JS-CW2012 |
| | Dept. | | Name 外観図 |
| Material | Approved by | | |
| Finish & Color | Checked by | | Dwg. No. / Item Code / Size A2 |
| | Designed by | | |
| Saved File Name | Scale | Unit | (株)日本防犯システム |
| | Sheet of | Weight | |

A2(594x420)